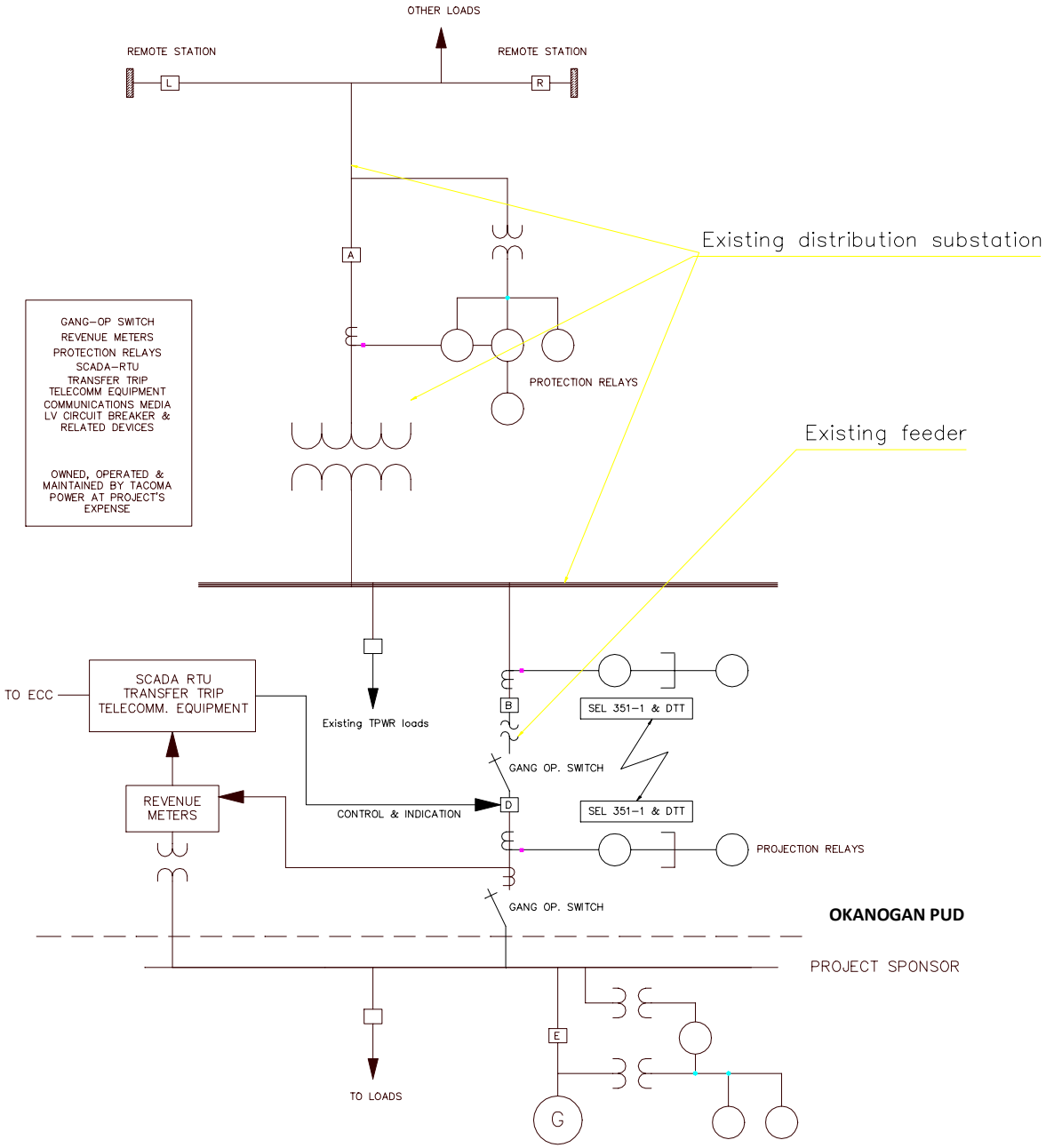
OTHER LOADS
REMOTE STATION
REMOTE STATION
L
R
A
Existing distribution substation
GANG-OP SWITCH
REVENUE METERS
PROTECTION RELAYS
SCADA-RTU
TRANSFER TRIP
TELECOMM EQUIPMENT
COMMUNICATIONS MEDIA
LV CIRCUIT BREAKER &
RELATED DEVICES
OWNED, OPERATED &
MAINTAINED BY TACOMA
POWER AT PROJECT'S
EXPENSE
PROTECTION RELAYS
Existing feeder
TO ECC
SCADA RTU
TRANSFER TRIP
TELECOMM. EQUIPMENT
Existing TPWR loads
B
SEL 351-1 & DTT
GANG OP. SWITCH
REVENUE
METERS
CONTROL & INDICATION
D
SEL 351-1 & DTT
PROJECTION RELAYS
GANG OP. SWITCH
OKANOGAN PUD
PROJECT SPONSOR
E
TO LOADS
G

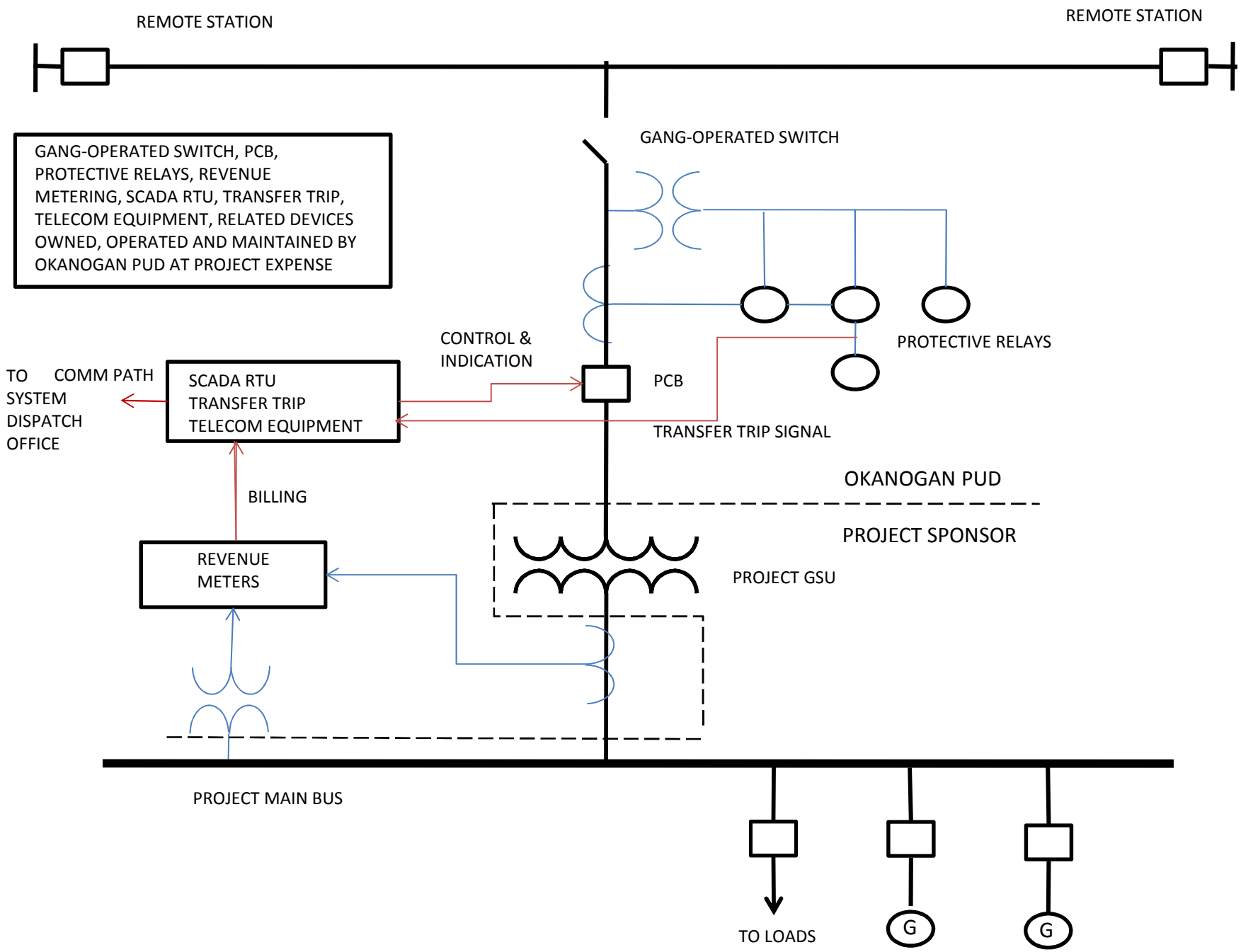
REMOTE STATION
REMOTE STATION
GANG-OPERATED SWITCH, PCB, PROTECTIVE RELAYS, REVENUE METERING, SCADA RTU, TRANSFER TRIP, TELECOM EQUIPMENT, RELATED DEVICES OWNED, OPERATED AND MAINTAINED BY OKANOGAN PUD AT PROJECT EXPENSE
GANG-OPERATED SWITCH
PROTECTIVE RELAYS
CONTROL & INDICATION
PCB
TO SYSTEM DISPATCH OFFICE
COMM PATH
SCADA RTU
TRANSFER TRIP
TELECOM EQUIPMENT
TRANSFER TRIP SIGNAL
OKANOGAN PUD
BILLING
PROJECT SPONSOR
REVENUE METERS
PROJECT GSU
PROJECT MAIN BUS
TO LOADS
G
G

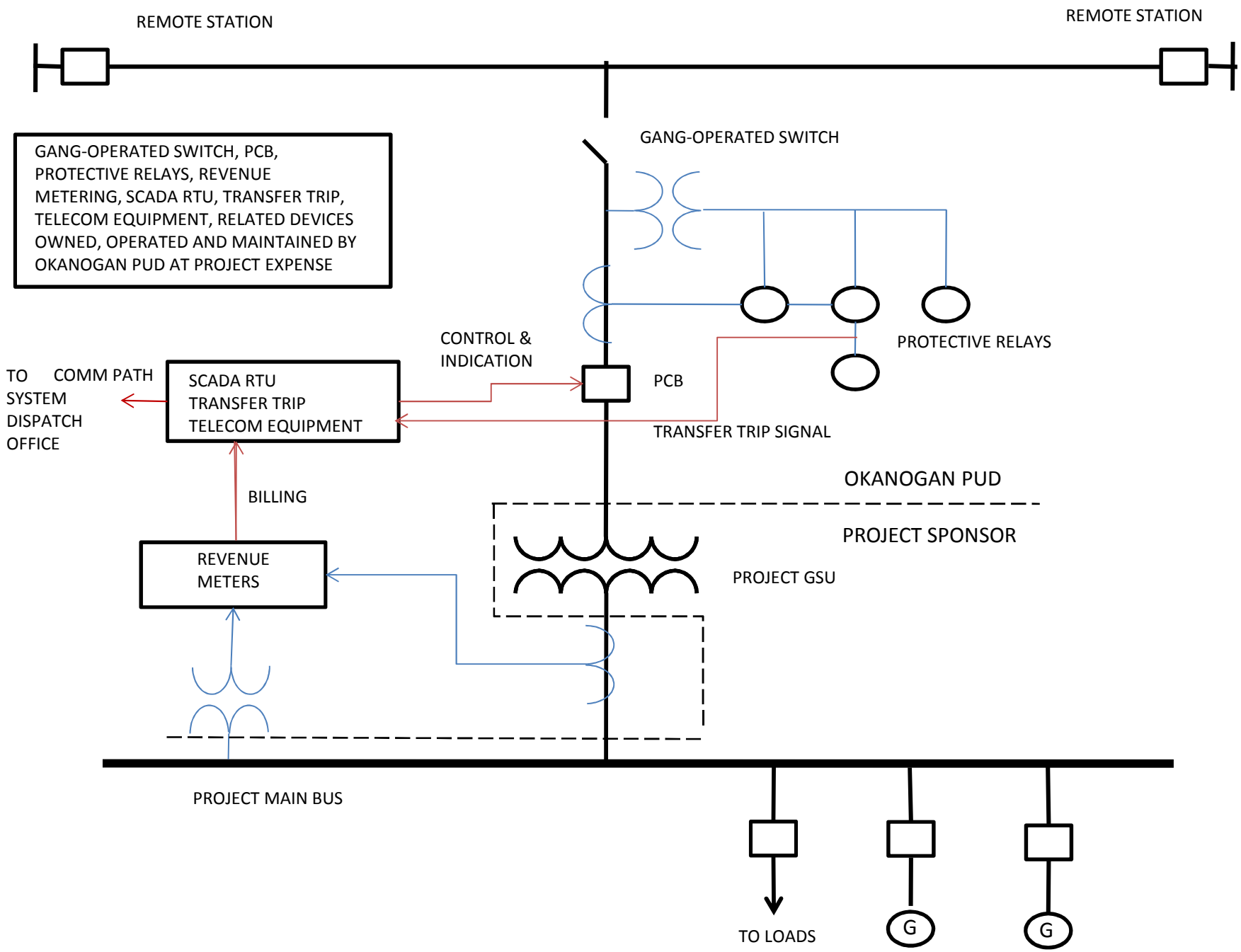
REMOTE STATION
REMOTE STATION
GANG-OPERATED SWITCH, PCB, PROTECTIVE RELAYS, REVENUE METERING, SCADA RTU, TRANSFER TRIP, TELECOM EQUIPMENT, RELATED DEVICES OWNED, OPERATED AND MAINTAINED BY OKANOGAN PUD AT PROJECT EXPENSE
GANG-OPERATED SWITCH
PROTECTIVE RELAYS
CONTROL & INDICATION
PCB
TO SYSTEM DISPATCH OFFICE
COMM PATH
SCADA RTU
TRANSFER TRIP
TELECOM EQUIPMENT
TRANSFER TRIP SIGNAL
OKANOGAN PUD
BILLING
PROJECT SPONSOR
REVENUE METERS
PROJECT GSU
PROJECT MAIN BUS
TO LOADS
G
G

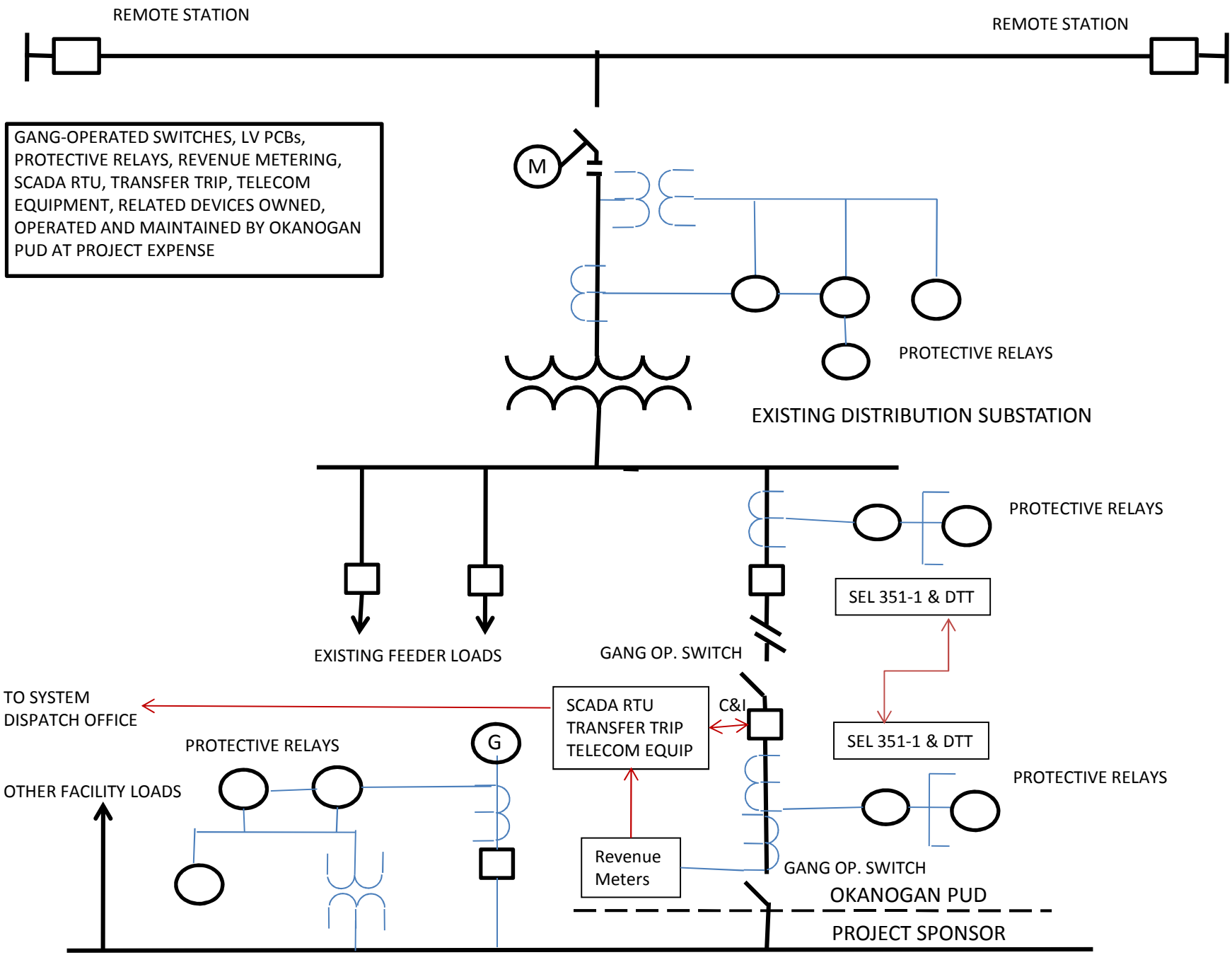
REMOTE STATION
REMOTE STATION
GANG-OPERATED SWITCHES, LV PCBs, PROTECTIVE RELAYS, REVENUE METERING, SCADA RTU, TRANSFER TRIP, TELECOM EQUIPMENT, RELATED DEVICES OWNED, OPERATED AND MAINTAINED BY OKANOGAN PUD AT PROJECT EXPENSE
M
PROTECTIVE RELAYS
EXISTING DISTRIBUTION SUBSTATION
PROTECTIVE RELAYS
SEL 351-1 & DTT
EXISTING FEEDER LOADS
GANG OP. SWITCH
TO SYSTEM DISPATCH OFFICE
SCADA RTU
TRANSFER TRIP
TELECOM EQUIP
C&I
SEL 351-1 & DTT
PROTECTIVE RELAYS
G
OTHER FACILITY LOADS
PROTECTIVE RELAYS
Revenue Meters
GANG OP. SWITCH
OKANOGAN PUD
PROJECT SPONSOR