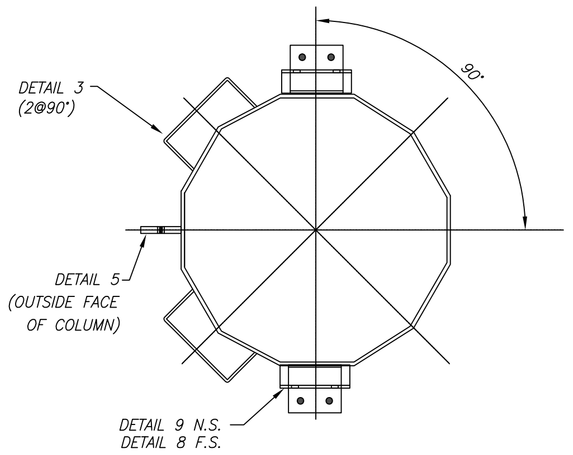

A THIS SECTION COLUMN

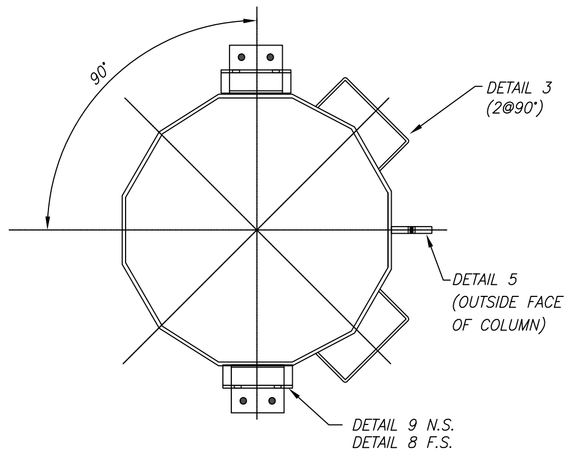

B THIS SECTION COLUMN

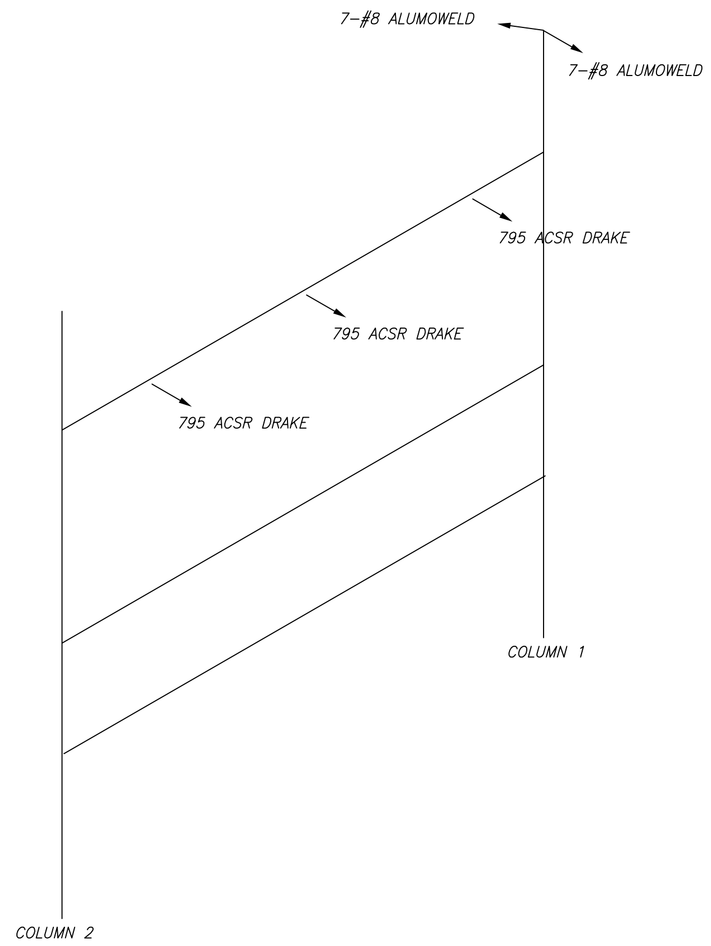

INPUT DATA:			Conductor 1:	
Conductor 1:	795.0 kcmil 26/7 ACSR "Drake"	(Initial Tension)	NESC Medium Loading:	1945 pounds
Diameter:	1.108 inches	(Initial Tension)	Heavy Ice (1/2 inch):	2190 pounds
Bare Weight:	1.093 lb/ft	(Initial Tension)	Ex. Low Temp (-20 deg):	1269 pounds
Wind Span:	300 ft	(Initial Tension)	High Temp (212 deg):	998 pounds
Line Angle:	0-5 degrees	(Final Tension)	Normal Cond (60 deg):	1130 pounds
No Elevation Change.		(Initial Tension)	15°F, 8 PSF, 1/4" Ice	2000 pounds

INPUT DATA:			Conductor 2:	
Conductor 1:	7#8 Alumoweld	(Initial Tension)	NESC Medium Loading:	1327 pounds
Diameter:	0.385 inches	(Initial Tension)	Heavy Ice (1/2 inch):	1368 pounds
Bare Weight:	0.262 lb/ft	(Initial Tension)	Ex. Low Temp (-20 deg):	664 pounds
Wind Span:	300 ft	(Initial Tension)	High Temp (120 deg):	421 pounds
Line Angle:	0-5 degrees	(Final Tension)	Normal Cond (60 deg):	492 pounds
No Elevation Change.		(Initial Tension)	0°F, 8 PSF, 1/2" Ice	2000 pounds

NOTES

1. DESIGN & FABRICATION SHALL BE IN ACCORDANCE WITH SPECIFICATION 19002717-1702.
2. ONE (1) DEADEND REQUIRED.
3. STRUCTURE DETAIL DRAWING IS TO BE USED TO PROCURE STEEL ONLY. THIS DRAWING IS NOT TO BE USED AS A FABRICATION DRAWING.
4. STRUCTURE DESIGNATION: 115 kV DEADEND. (DE1)
5. STRUCTURE SHALL BE HOT DIPPED GALVANIZED AFTER FABRICATION.
6. ANCHOR BOLT DESIGN & DETAIL TO BE INCLUDED BY FABRICATOR.
7. THE WEIGHT OF THE STRUCTURE SHALL BE CALCULATED BY THE FABRICATOR AND USED IN THE DESIGN FOR ALL LOAD CASES.

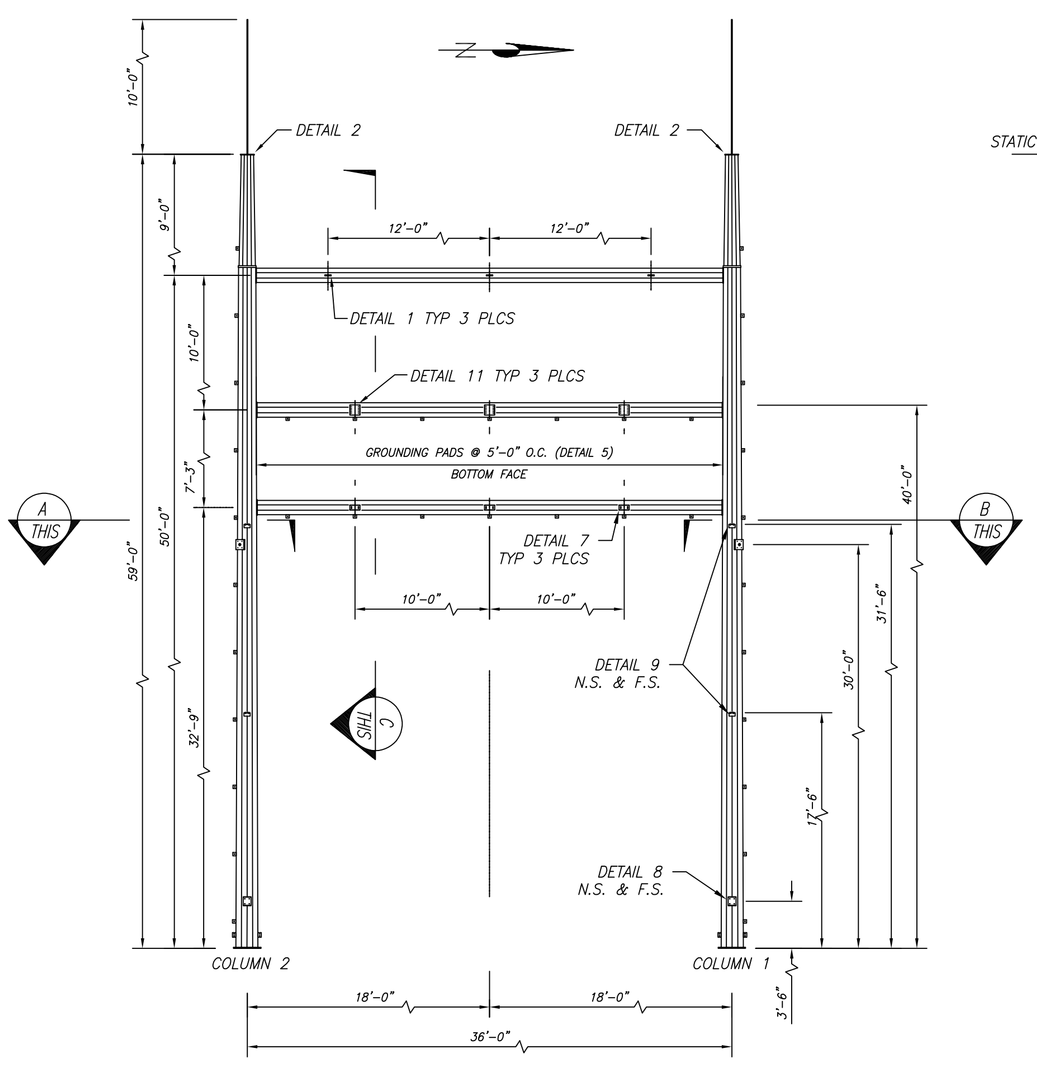

115 kV DEADEND H-FRAME

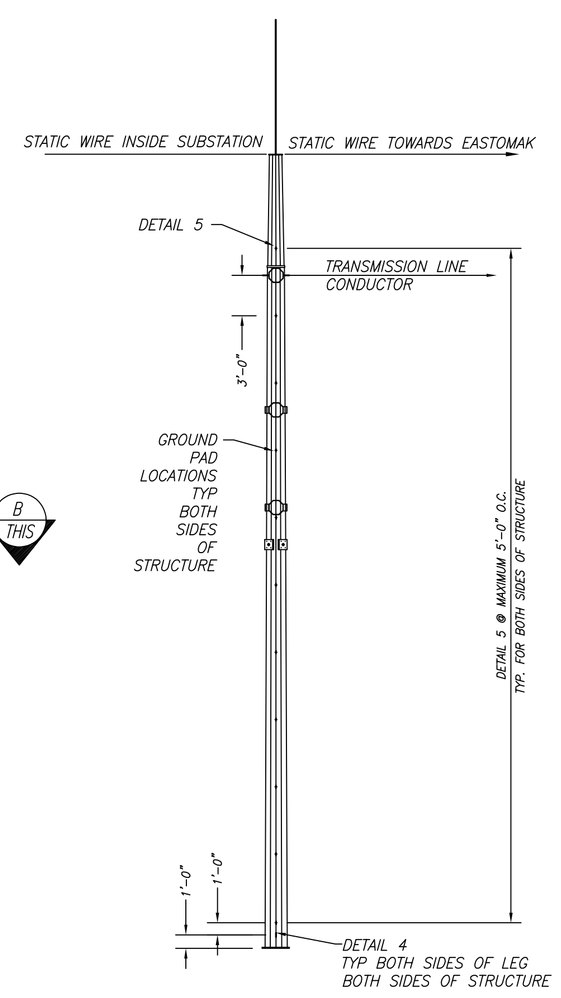

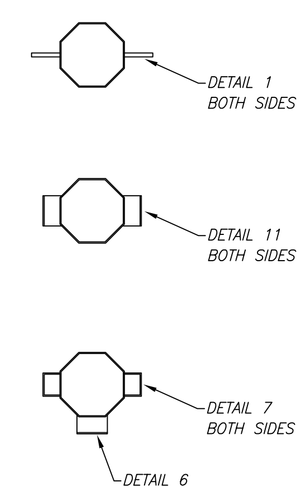

C THIS SECTION BEAM

		OKANOGAN COUNTY PUD No. 1			
FILE NAME: TONA-S4-01 DE PERFORMANCE-DE1.DWG		Project: TONASKET SUBSTATION			
REV.	DATE	Drawing: 115/13.8KV SUBSTATION DEADEND PERFORMANCE - DE1			
A	10/16/19				
0	10/31/19	DESIGNED	ENGINEER	DRAWN	SHEET
1	2/14/22	KMS	AMN	KKM	2 OF 3
		SCALE	W.O. No.	DATE	DWG #
		AS SHOWN	XXXXXX	10/16/19	TONA-S4-01